A15HD450WBB

Omni Directional Mobile Antenna
Wideband No Tune 380-520 MHz

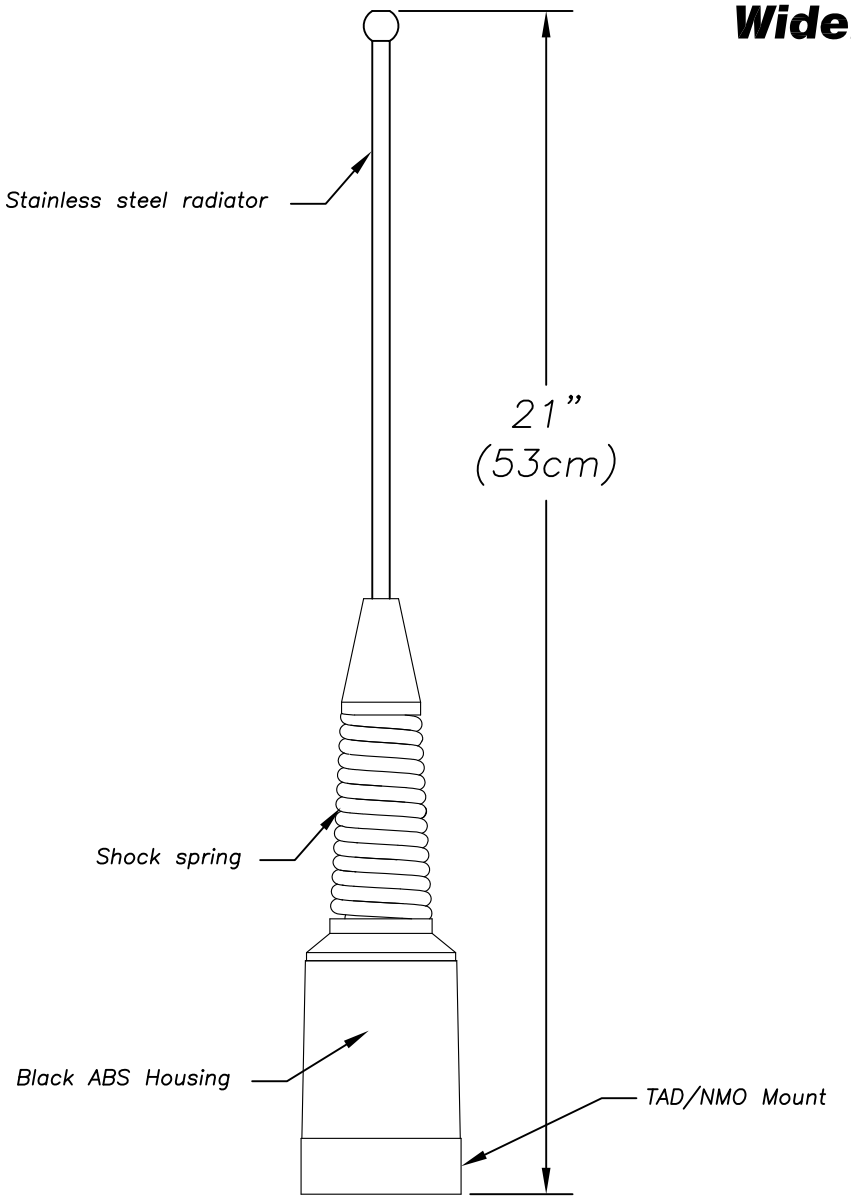

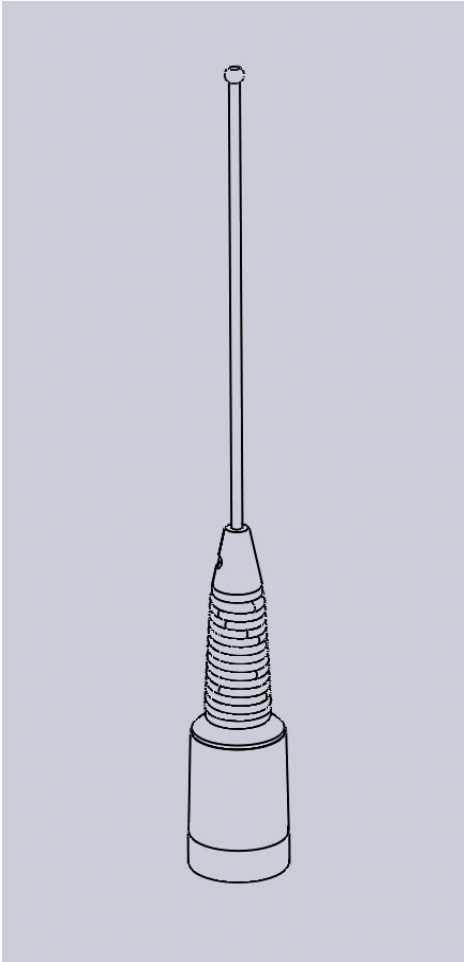

RoHS Compliant

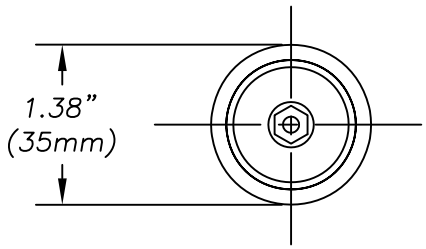

Antenna Specifications:

Frequency:	380–520 MHz
Gain:	3 dBi
VSWR:	<2:1 for Groundplane
	<2:5 for No Groundplane
Nominal Impedance:	50 OHM Nominal
Maximum Power:	100 Watts
Connector:	Spring loaded contact
Radiator:	Stainless steel
Base:	ABS and aluminum
Mounting:	Standard TAD/NMO type
Height:	21" (53cm)
Temperature:	–40C to +80C
Style:	Shock spring
Color:	Black
Mounting Kit:	UNIBKT & TAN for No Groudplane

TC	10/14/20	A

MobileMark
antenna solutions

US OFFICE & HEADQUARTERS: 1140 W THORNDALE AVE, ITASCA, IL 60143
TEL: (847) 671-6690 * FAX (847) 250-5120

UK OFFICE: 8 MIRAS BUS PARK, KEYS PARK ROAD. HEDNESFORD WS12 2FS, UK.
UK TEL: (+44) 1543-459555 FAX (+44) 1543-459545

VISIT OUR WEBSITE AT WWW.MOBILEMARK.COM